ENGR 212 Laboratory Experiment 3

Objectives:

1. Derive equations to solve electrical circuits using nodal and mesh analyses.
2. Use Matlab to solve simultaneous equations derived from electrical circuits.

Materials:

1. Matlab software package on the lab computers

Circuit Problems for Practice:

1. Use nodal analysis to write a set of equations for the circuit in Fig. 1. Use Matlab to find the nodal voltages v_1, v_2, and v_3.

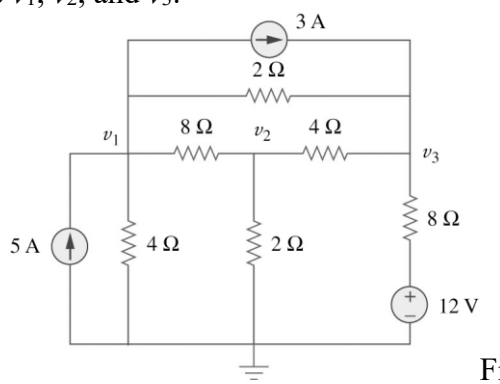

Figure 1

2. Use nodal analysis to write a set of equations for the circuit in Fig. 2. Use Matlab to find the nodal voltages v_1, v_2, and v_3.

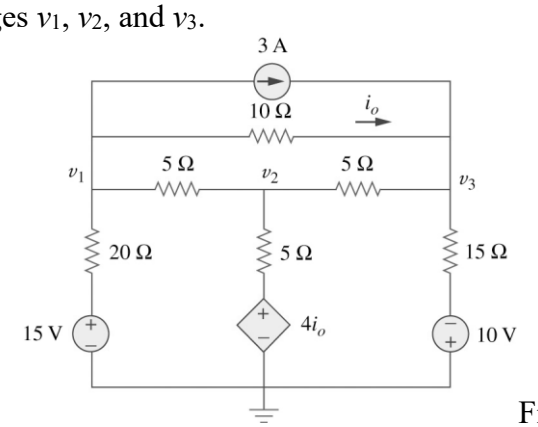

Figure 2

3. Use nodal analysis to write a set of equations for the circuit in Fig. 3. Use Matlab to find the nodal voltages v_1, v_2, and v_3. Note that units of S represent Siemens, for conductance. Conductance is the reciprocal of resistance. For example, 4 S = ¼ **Ω**.

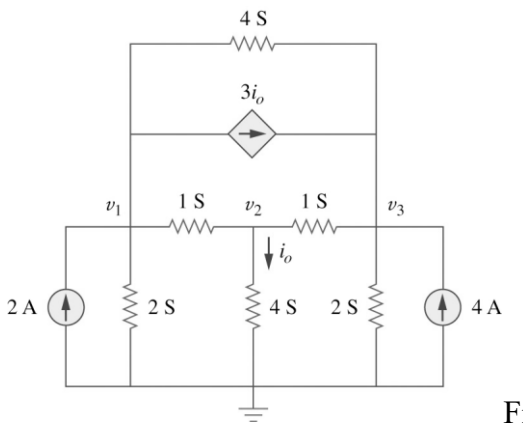

Figure 3

4. Find the mesh currents in the circuit of Fig. 4 using MATLAB.

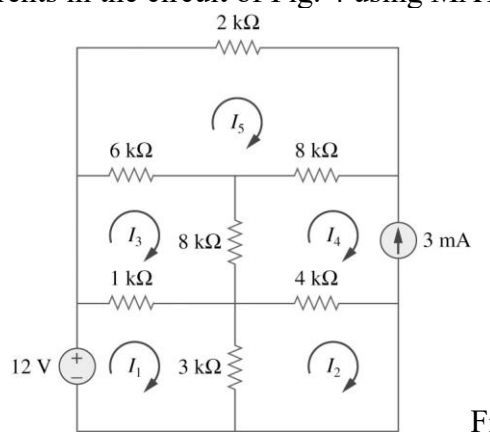

Figure 4

5. Write a set of mesh equations for the circuit in Fig. 5. Use MATLAB to determine the mesh currents.

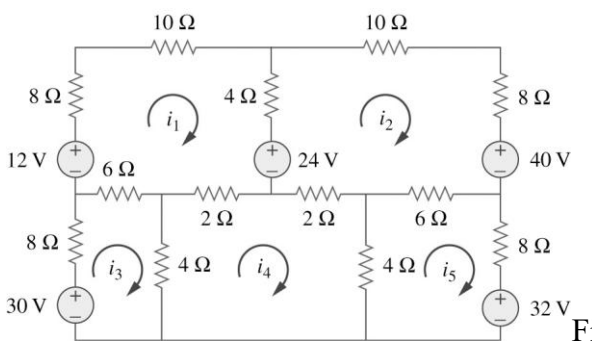

Figure 5

NOTE: In each case submit your equations and the answer. Show your work in deriving the equations, then use MATLAB to solve. Turn in derivations and solutions.